Manufacturing Processes (2), IE-352

Ahmed M El-Sherbeeny, PhD

Spring 2017

Manufacturing Engineering Technology in SI Units, 6th Edition

Chapter 23: Machining Processes: Hole Making – Part A (Lathe Operations, Boring, Reaming, Tapping)

Copyright © 2010 Pearson Education South Asia Pte Ltd

Chapter Outline

1. Introduction
2. Boring and Boring Machines
3. Reaming and Reamers
4. Tapping and Taps

Introduction

- Machining processes discussed here:
  - with capability of producing parts that are round in shape
  - most basic is turning: part is rotated while it is being machined
- *Lathe* (or by similar *machine tools*):
  - Considered to be the oldest machine tools
  - Carry out turning processes (*see next 4 slides*):
  - Highly simple, versatile machines
  - Requires a skilled machinist
  - Inefficient for repetitive operations and for large production
  - All parts are circular (property known as *axisymmetry*)
  - Processes produce a wide variety of shapes
  - Speeds range from moderate to high speed machining

Introduction

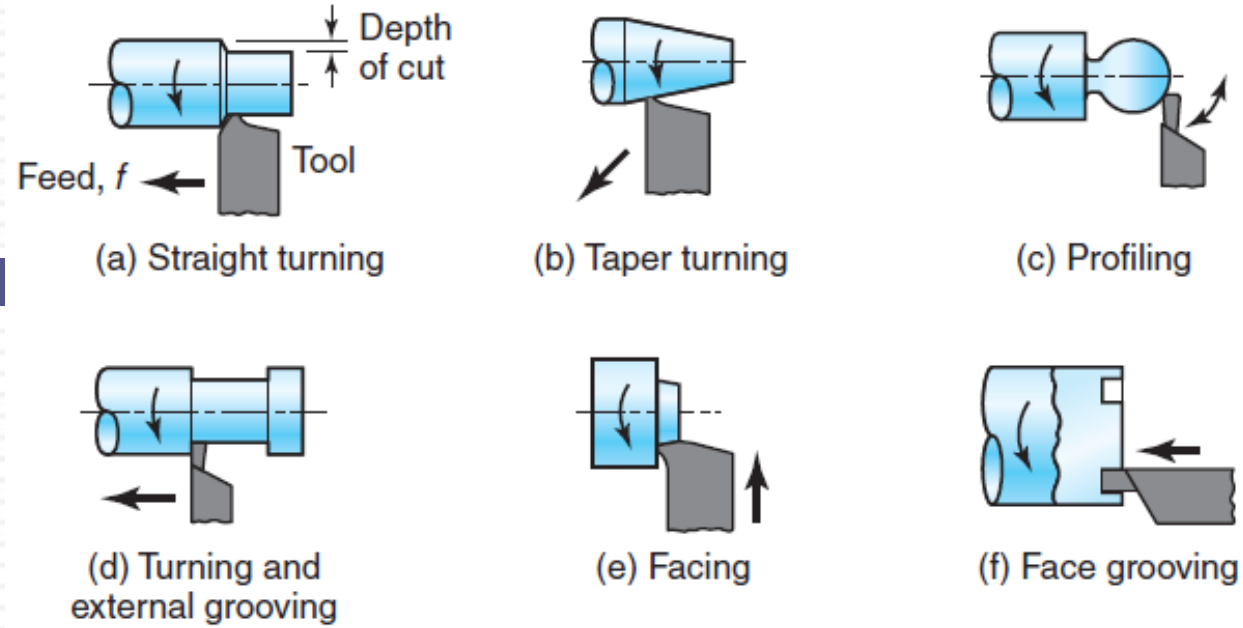

Processes carried out on a lathe:

- **Turning** (figure a-d):
  - Produce straight, conical, curved, or grooved workpieces
  - Examples: shafts, spindles, pins
- **Facing** (figure e):
  - Produce flat surface at end of part and ⊥ to its axis
- **Face grooving** (figure f):
  - Produce grooves for applications such as O-ring seats

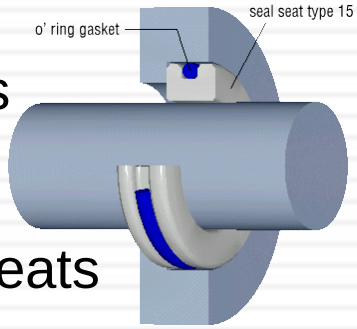

cross-section of an installed seal seat type 15

Introduction

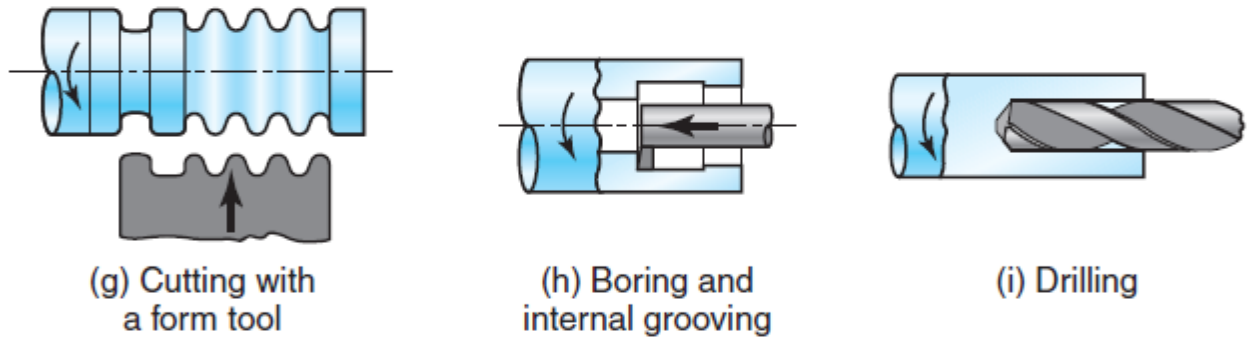

Cont. Processes carried out on a lathe:

- **Cutting with forms tools** (figure g):
  - Produce axisymmetric shapes (functional, aesthetic purposes)
- **Boring**:
  - Enlarge hole/cylindrical cavity made by previous process:
  - Produce circular internal grooves (figure h)
- **Drilling** (figure i):
  - Produce a hole
  - May be followed by boring to improve dim. acc./ surface finish

Introduction

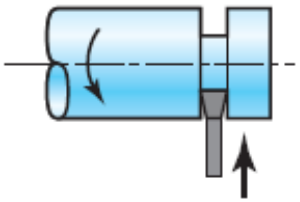

(j) Cutting off

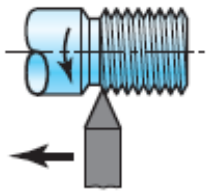

(k) Threading

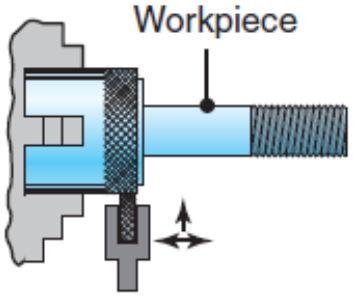

(l) Knurling

Cont. Processes carried out on a lathe:

- **Parting** (figure j): AKA **cutting off**
  - Cut a piece from the end of a part
  - Used with production of blanks for additional processing/parts
- **Threading** (figure k):
  - Produce external or internal threads
- **Knurling** (figure l):
  - Produce regularly shaped roughness on cylindrical surfaces
  - Example: making knobs, handles (remember micrometer)

Introduction

General Characteristics of Machining Processes and Typical Dimensional Tolerances

Process	Characteristics	Typical dimensional tolerances, ± mm
Turning	Turning and facing operations on all types of materials, uses single-point or form tools; engine lathes require skilled labor; low production rate (but medium-to-high rate with turret lathes and automatic machines) requiring less skilled labor	Fine: 0.025–0.13 Rough: 0.13
Boring	Internal surfaces or profiles with characteristics similar to turning; stiffness of boring bar important to avoid chatter	0.025
Drilling	Round holes of various sizes and depths; high production rate; labor skill required depends on hole location and accuracy specified; requires boring and reaming for improved accuracy	0.075
Milling	Wide variety of shapes involving contours, flat surfaces, and slots; versatile; low-to-medium production rate; requires skilled labor	0.013–0.025
Planing	Large flat surfaces and straight contour profiles on long workpieces, low-quantity production, labor skill required depends on part shape	0.08–0.13
Shaping	Flat surfaces and straight contour profiles on relatively small workpieces; low-quantity production; labor skill required depends on part shape	0.05–0.08
Broaching	External and internal surfaces, slots, and contours; good surface finish; costly tooling; high production rate; labor skill required depends on part shape	0.025–0.15
Sawing	Straight and contour cuts on flat or structural shapes; not suitable for hard materials unless saw has carbide teeth or is coated with diamond; low production rate; generally low labor skill	0.8

Introduction

- Lathes:
  - Available in different designs, sizes, capacities, computer-controlled features
  - Below: general view of typical lathe, showing various components

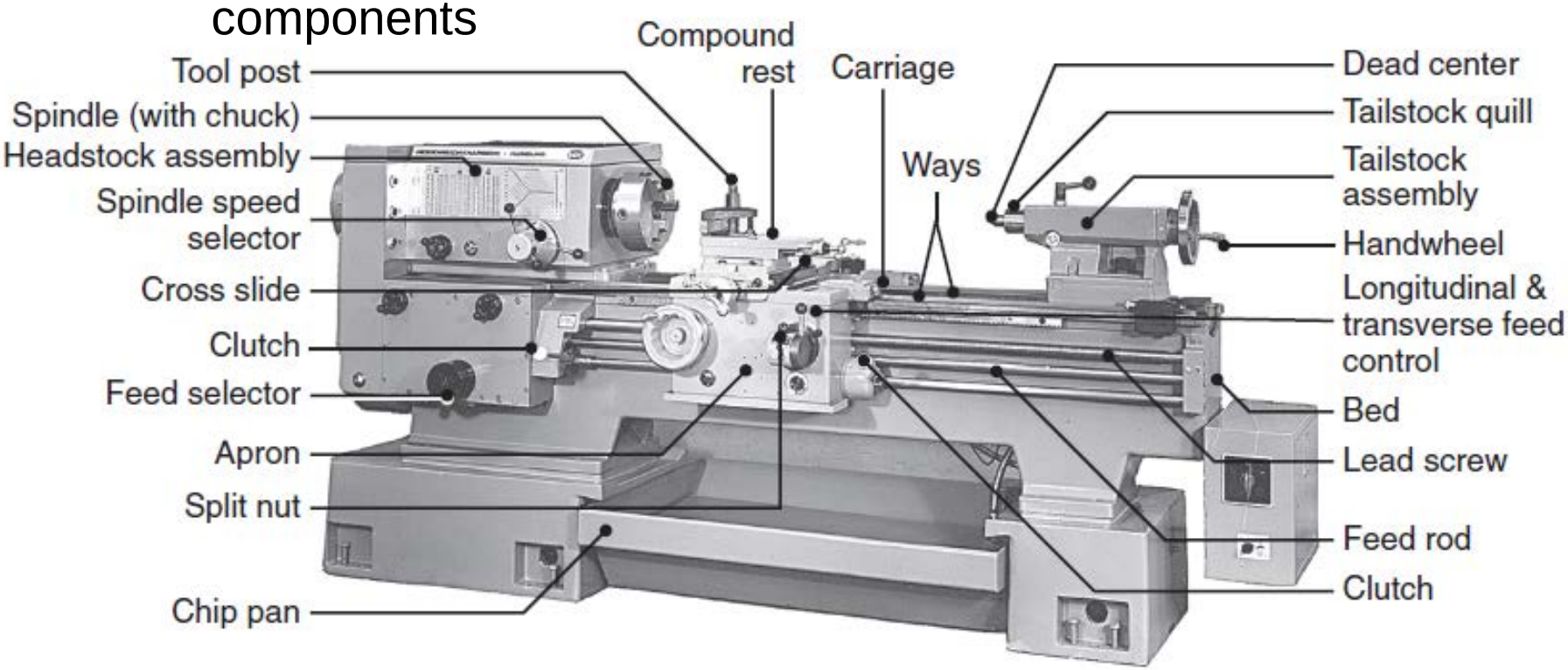

Introduction

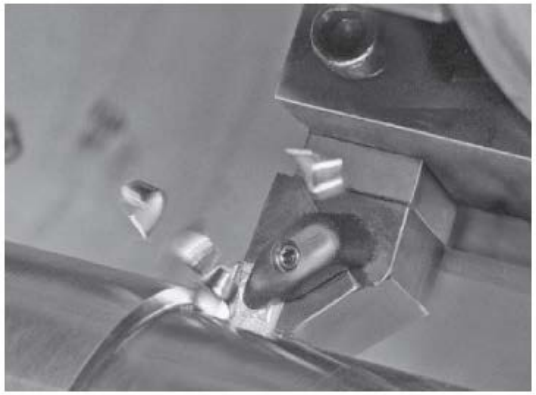

(a)

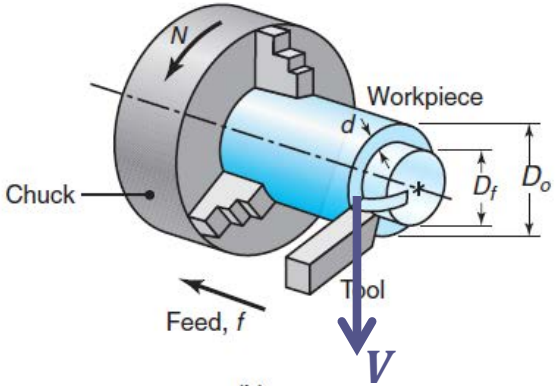

(b)

a) Turning operation (showing insert and chip removal)

b) Basic turning operation showing: N $(rev/\min)$, d, f; Note, V is surface speed of workpiece at tool tip

- Turning (see above) is performed at various:
  1. Rotational speeds, N, of workpiece clamped in a spindle
  2. Depths of cut, d
  3. Feeds, f
- Change in parameters depends on:
  - workpiece materials
  - cutting-tool materials
  - surface finish
  - dimensional accuracy
  - characteristics of the machine tool

Introduction

Cutting Fluids

- Recommendations for cutting fluids suitable for various workpiece materials
- Note:
  - Aluminum
  - Copper
  - Carbon/ low alloy steels
- Current trend: **DM/NDM**

General Recommendations for Cutting Fluids for Machining (see also Section 33.7)

Material	Type of fluid
Aluminum	D, MO, E, MO + FO, CSN
Beryllium	MC, E, CSN
Copper	D, E, CSN, MO + FO
Magnesium	D, MO, MO + FO
Nickel	MC, E, CSN
Refractory metals	MC, E, EP
Steels	
Carbon and low-alloy	D, MO, E, CSN, EP
Stainless	D, MO, E, CSN
Titanium	CSN, EP, MO
Zinc	C, MC, E, CSN
Zirconium	D, E, CSN

Note: CSN = chemicals and synthetics; D = dry; E = emulsion; EP = extreme pressure; FO = fatty oil; and MO = mineral oil.

Boring and Boring Machines

Properties of Boring

- Boring:
  - Enlarges hole made by other process (e.g. turning), or
  - Produces circular internal profiles in hollow workpieces (fig. h)
- Cutting tools mounted on *boring bar* (next slide)
- Boring bars:
  - Used to reach full length of bore
  - Must be stiff to minimize tool deflection & maintain dimen. acc.
  - Designed, built with capabilities to dampen vibration/chatter
  - $\Rightarrow$ better to use material with high elastic modulus (e.g. WC)

Boring and Boring Machines

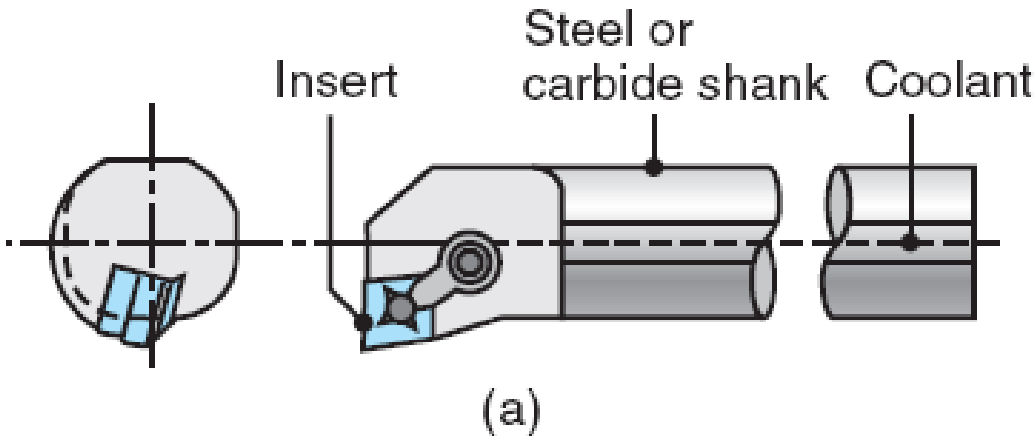

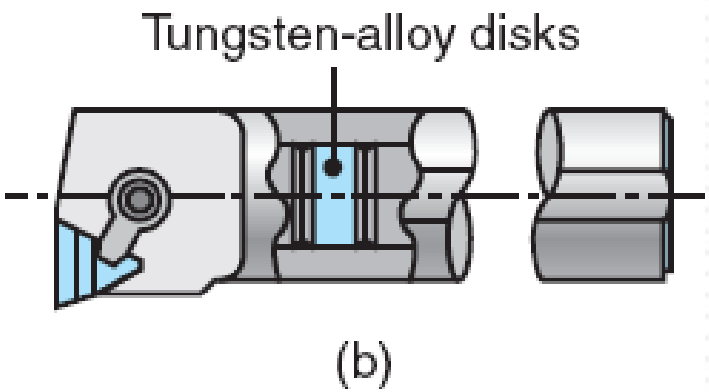

a) Steel boring bar with carbide insert (note passageway in bar for cutting fluid)

b) Boring bar with W “inertia disks”, sealed in bar to dampen vibration/chatter

Boring and Boring Machines

Boring Machines

- Boring operations carried out on
  - Lathes for small workpieces
  - **Boring mills** for large workpieces
- Boring mills
  - Either horizontal or vertical
  - Capable of performing different operations (e.g. turning, facing, chamfering)
- **Horizontal boring machines**
  - Workpiece is mounted on a table
  - Table can move horizontally in axial and radial directions

Boring and Boring Machines

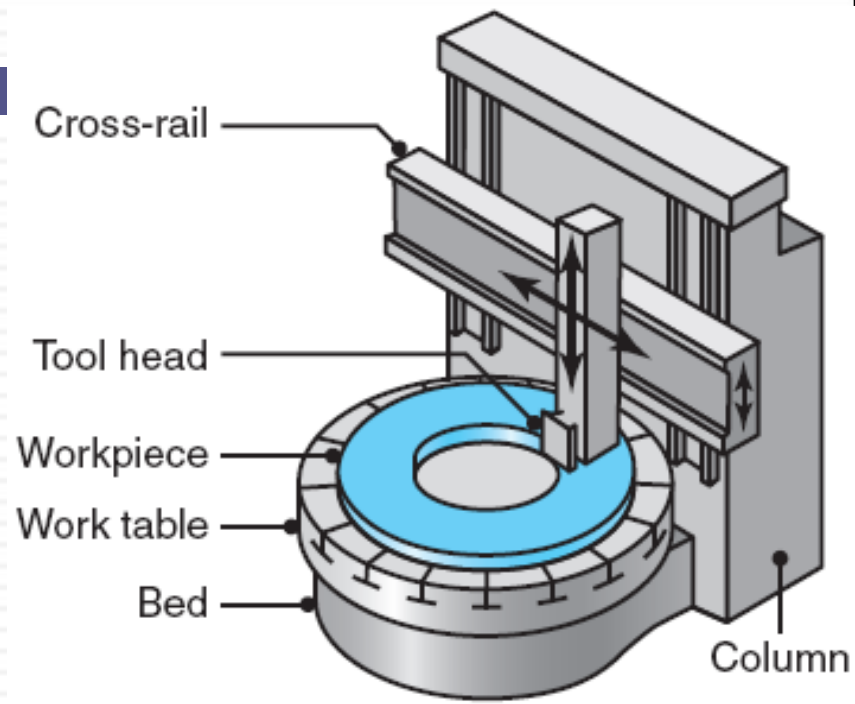

- **Vertical boring mill** (→)
  - Similar to lathe
  - Has vertical axis of workpiece rotation
  - Workpiece diameters: up to $2.5\ m$
- Cutting tool:
  - Usually single point (HSS or carbide)
  - Mounted on tool head
  - Capable of movements: vertical (boring and turning), radial (facing, using cross-rail)
  - Speeds/feeds: similar to turning
  - Power: up to $150\ kW$

Boring and Boring Machines

Design Considerations for Boring (similar to turning):

- Through holes should be specified (not blind holes)
  - Blind hole: doesn't go through thickness of workpiece
- Greater the length-to-bore-diameter ratio $\Rightarrow$
  - More difficult it is to hold dimensions
  - More deflections of boring bar
  - This is due to cutting forces & higher vibration/chatter
- Interrupted internal surfaces:
  - Should be avoided
  - e.g. internal splines, radial holes going through thickness

Reaming and Reamers

- *Reaming:* operation used to:
  - Make existing hole dimensionally more accurate (than drilling)
  - Improve surface finish
- Sequence to produce accurate holes in workpieces:
  1. Centering
  2. Drilling
  3. Boring
  4. Reaming
- For even better accuracy & surface finish, holes may be
  - *burnished,* or
  - internally *ground* and *honed*

Copyright © 2010 Pearson Education South Asia Pte Ltd

Reaming and Reamers

- *Reamer*:
  - Multiple-cutting edge tool
  - Has straight or helically fluted edges (see below)
  - Removes min. of $0.2\ mm$ on diameter of drilled hole
  - Harder metals: removes $0.13\ mm$
  - Removing smaller layers $\Rightarrow$
    - Reamer may be damaged
    - Hole surface may become burnished

Terminology for helical reamer

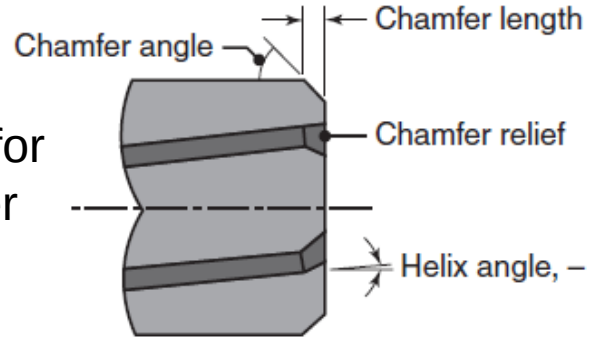

Rose reamers

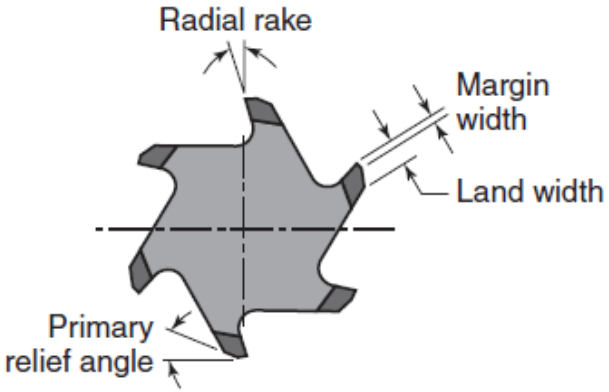

Reaming and Reamers

Types of Reamers

- *Hand reamers*
  - Straight or have tapered end in the first third of their length
- *Machine (*AKA *chucking) reamers*:
  - Mounted in a *chuck* and operated by a *machine*
  - Available in 2 types:
    - *Rose reamers* (last slide): remove considerable amount of material
    - *Fluted reamers*: used for light cuts: $0.1\ mm$ in hole diameter
- *Shell reamers*
  - Used for holes larger than $20\ mm$

Reaming and Reamers

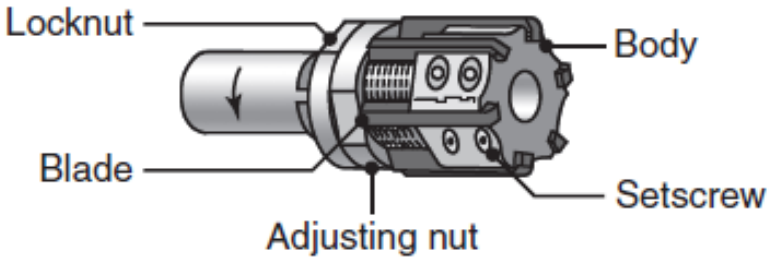

Inserted-blade adjustable reamer

Cont. Types of Reamers

- *Expansion reamers*
  - Adjustable for small variations in hole size
  - Compensate for wear of reamer's cutting edges
- *Adjustable reamers* (see above)
  - Set for specific hole diameters ⇒ versatile
- *Dreamer* (recent development)
  - Tool combines: drilling + reaming
  - Tool tip: drilling; rest of tool: reaming
- Reamer material:
  - HSS, or solid carbides, or carbide cutting edge
  - Maintenance/reconditioning important for accuracy/S.F.

Tapping and Taps

- *Tapping:*
  - Process to produce internal threads in workpieces
- *Tap*
  - Chip-producing threading tool
  - Has multiple cutting teeth
  - Available as 2, 3, or 4 flutes (see figure below)
  - Most common in production: “2-flute spiral point tap”
  - Tap size range: up to $100\ mm$

terminology for a tap

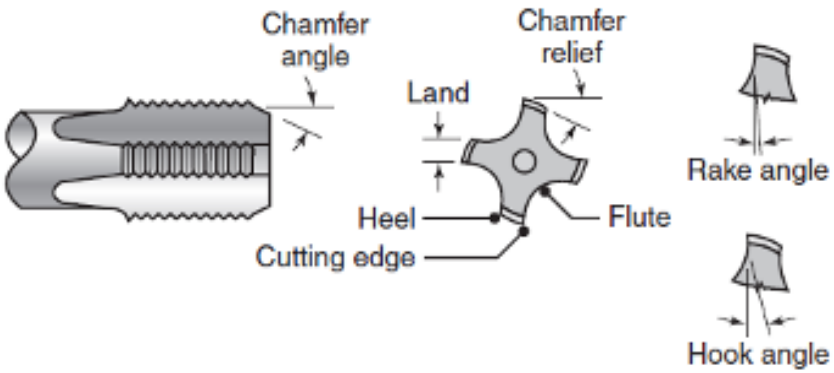

Tapping and Taps

Types of Taps

- *Tapered taps:*
  - Reduce torque required for tapping of through holes
- *Bottoming taps:*
  - Used for tapping blind holes to their full depth
- *Collapsible taps*
  - Used in large-diameter holes
- *Drapping:*
  - Combination of drilling and tapping (in a single tool)
  - Increases tapping productivity
  - Tip: drilling; rest of tool: tapping

Tapping and Taps

- Removing chips:
  - Problem during tapping (due to small clearances)
  - Chips must be removed
  - Otherwise: large torque $\Rightarrow$ break the tap
  - Solutions:
    - Use of cutting fluid
    - Periodic reversal and removal of tap
  - Result:
    - Effective ways to remove chips
    - Improved tapped hole quality

Tapping and Taps

Tapping Machines

- Can be done by hand
- Machines:
  1. Drilling machines
  2. Lathes
  3. Automatic screw machines
  4. Vertical CNC milling machines
- Special tapping machines:
  - Has features for multiple tapping operations
- Multiple spindle tapping heads
  - Used in automotive industry (tapping = $30 - 40\%$ of machining)
  - Involves automatic tapping of nuts (see above)

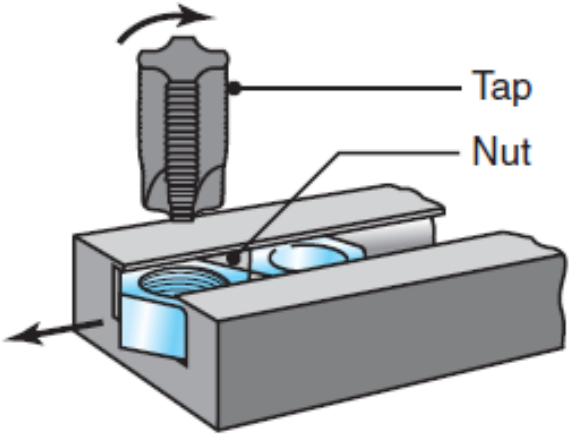

Tapping and Taps

Tapping Properties

- Tap life: as high as $10{,}000$ holes
- Taps usually made of HSS
- *High-speed tapping*:
  - Increases productivity: surface speeds: as high as $100\ m/\mathrm{min}$
  - Operating speeds: as high as $5000\ rpm$
- *Self-reversing* tapping systems: used with CNC machines
- Recent developments:
  - Applying cutting fluid to cutting zone through spindle and hole in the tap (like in boring)
  - Also helps flush chips out of the hole